Installers & User Guide **Switch.** SW1

igloo

Version 0.1 09/25

Hi there!

In this guide, you'll find everything you need to get started with your lock.

If you do not find what you're looking for, please reach out to us directly at support@igloohome.co. We're here to help.

We're always updating our guides because we want to keep things fresh!
You can visit igloohome.co/support periodically to view the latest version.

Table of Contents

Document Details	4
Introduction	5
Overview of User Interface	6
Specifications	7
Mounting The Switch	10
Wiring	12
Connecting Hardware to the Switch	14
LED Status Indicators	19
Hard Reset	20
Creating an account	21
Pairing The Switch	22
Manage Lock Features	23
Admin Features	25
Compatible Devices	26
Troubleshooting	27
FCC Compliancce	29
IC Caution	30

Document Details

Install Guide v0.1

Firmware Version
Firmware version of the Switch can be verified on the Iglooworks mobile app

UL294 Performance Levels
- Attack Level: Level I
- Endurance Level: Level IV
- Line Security Level: Level I
- Standby Power Level: Level I

Intended Area of Use
The Switch is intended for indoor operation.
The Switch should be installed within an appropriately rated enclosure if used outdoors.

Introduction

The switch is a bluetooth door controller that delivers modern smart access control. It can control a wide range of 9-24V DC access control hardware via igloo solutions. It is compatible with all igloo locks and accessories and can provide access through bluetooth keys, remote unlock or pin-code credentials making it a flexible choice for a wide range of users.

What's in the box

- Quick Start Guide
- Compliance Sheet
- 4 x Mounting Screws w/ Anchors
- 4 x M3 Machine Screws w/ Nut

What you'll need

- A bluetooth enabled smartphone
- A screw driver or power drill
- 9-24V_{DC} power source
- Electric locking hardware (e.g. electric strike, magnetic lock)
- Optional: Enclosure with appropriate rating for deployment
- Optional: Request-to-Exit (REX) device
- Optional: Door Position Indicator (DPI) device

Overview of User Interface



Terminal	Description
INPUT	
DC+	DC power input Required: 9-24V_{DC}-2A
DC-	
OUTPUT	
DC+	DC power output Max: 8.1-24V DC-2A (18W-48W from switch power supply)
DC-	
Door Input	
REX/COM	Optional - Request to Exit (e.g. exit push button)
DPI/COM	Optional - Door Position Indicator
Door Output	
NC	Normally Closed / Max 24V @ 2A
NO	Normally Open / Max 24V @ 2A
COM	Common
Button	
RESET	Press & hold the hard reset button (5 sec) to restore the factory default configuration Caution! reset will clear all credentials & settings.

Specifications

Electrical Specifications

Parameter	Description
Power Input	
Voltage	9-24 V_{DC} , does not support AC input
Current	Up to 2A
Door Input - REX, DPI	
Voltage	9-24 V_{DC}
Current	< 50mA
Door output (isolated & non-isolated)	
Voltage	9-24 V_{DC}
Current	Up to 2A
Max power output	9-24 V_{DC} up to 18/48W respectively
Other	
Device power consumption (typical)	1W
RTC Power	In the event of power failure, the rechargeable on-board battery will power the Real Time Clock for up to 30 days.
Antenna Power	2.4 GHz (Bluetooth) < 20 dBm

Recommended Wiring

Terminal	AWG	Max Length
INPUT (isolated)	22	182m / 600 ft
INPUT (non-isolated)	18	457m / 1500 ft
OUTPUT	18	457m / 1500 ft
Request-to-Exit (REX)	22	457m / 1500 ft
Door Position Indicator (DPI)	22	457m / 1500 ft
NC/NO/COM	18	457m / 1500 ft

Mechanical Specifications

Parameter	Description
Dimensions (L x W x H)	81 (W) x 68 (H) x 23(T) mm / 3.19 (W) x 2.68 (H) x .90 (T) in
Net Weight	0.07kg / 0.15lbs
Enclosure Material	ABS-PC, UL94 V-0 fire rated
Finish	Matte Black
Mounting Type	• Top hat DIN rail EN 50022 – 35 × 7.5 x 1 mm • Wall or Panel Mount using M3 or PA-ST2.9 screws
Connector Type	Screw Type Terminals
Wire gauge (AWG)	26-14 AWG
Operating Temperature & Relative Humidity (RH)	-20°C to +50°C, 0-85% RH (non-condensing)
Storage Temperature & Relative Humidity (RH)	-30°C to +70°C, 0-95% RH (non-condensing)
IP Rating	IP50

Mounting the Switch

Screw Mounting

1. Position the Switch on a surface at the desired location
2. Mark mounting holes on the Wall, Panel or Enclosure using the screw holes
3. Drill pilot holes using a power drill if needed
4. Insert in the screw anchors into the holes if needed
5. Secure the Switch using the screws provided

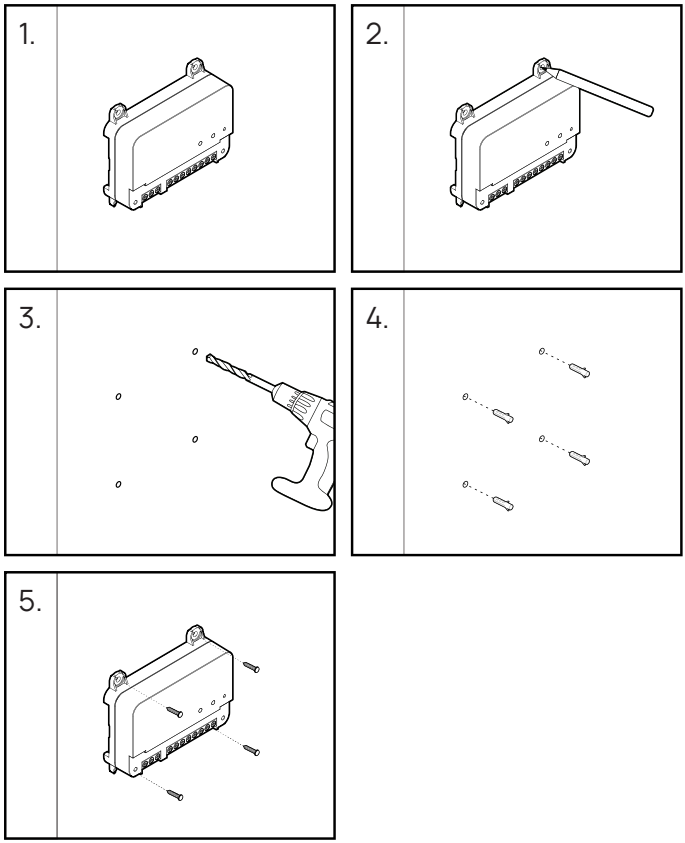

DIN Rail Mounting – DIN Rail Standard EN 50022

Slide the Switch along the guides of a standard 35mm DIN rail and fix it to the rail by means of the locking clip on the enclosure.

Mounting dimensions

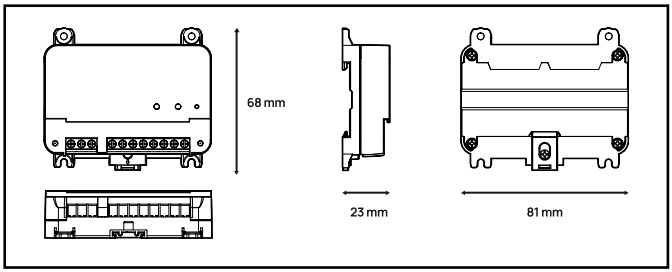

Mounting position

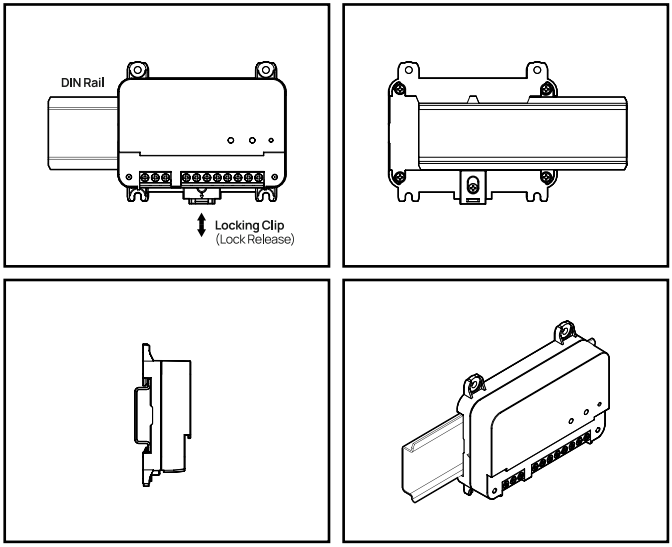

Wiring

Connecting an Electronic Lock

Warning – Ensure that the Switch and electronic lock are powered off before wiring, inserting or removing locks or any other peripherals.

1. Isolated (DRY)

    - The Switch does not provide power to the electronic lock. The electronic lock is used with an external power supply.

    - In this setup, there is power isolation between the Switch and electronic lock.

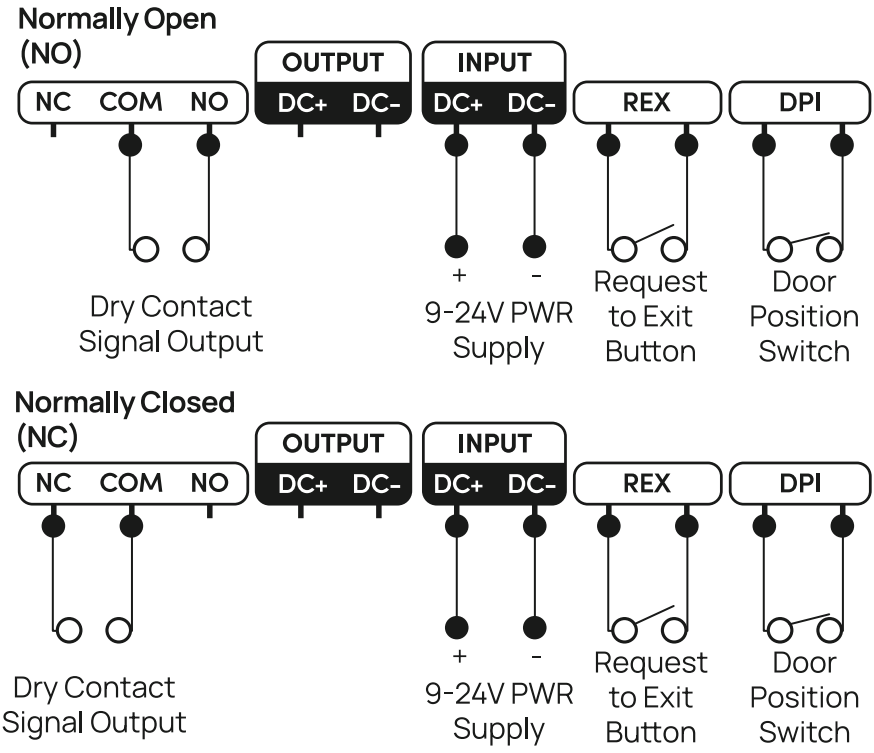

2. Non-isolated (WET)

    - The Switch provides power to the electronic lock. Output 9-24V_{DC}, up to 2A

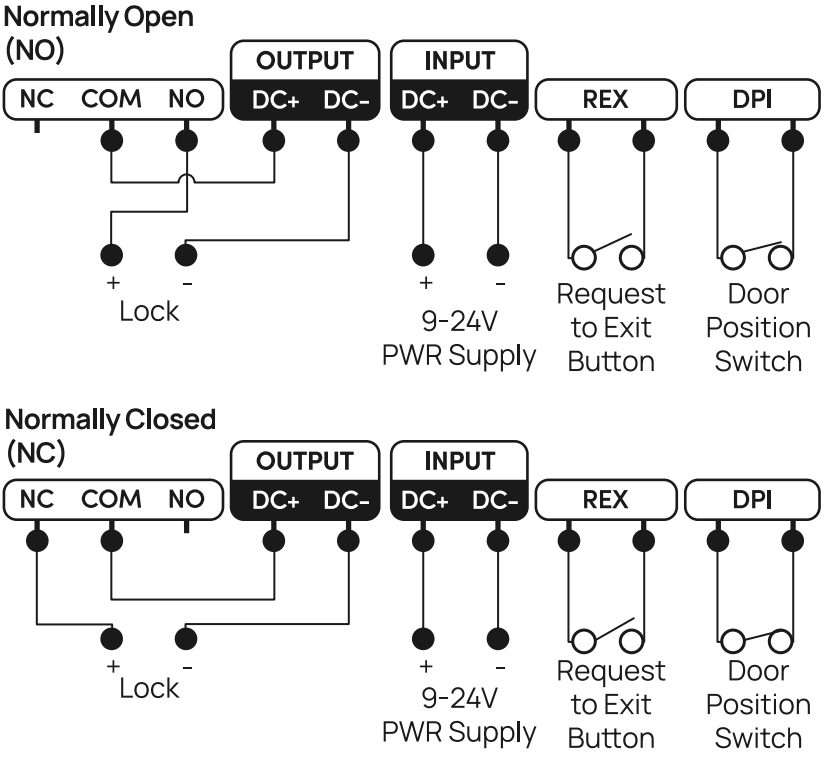

Connecting hardware to the Switch

Connecting to Power

1. Check the INPUT voltage & polarity from the power supply.
2. Voltage must be between 9-24V_{DC} for the switch to operate normally.
3. Turn off the power when connecting wires
4. Connect the + wire to the IN + terminal
5. Connect the - wire to the IN - terminal
6. Turn on the power supply
7. The PWR LED should turn on solid green

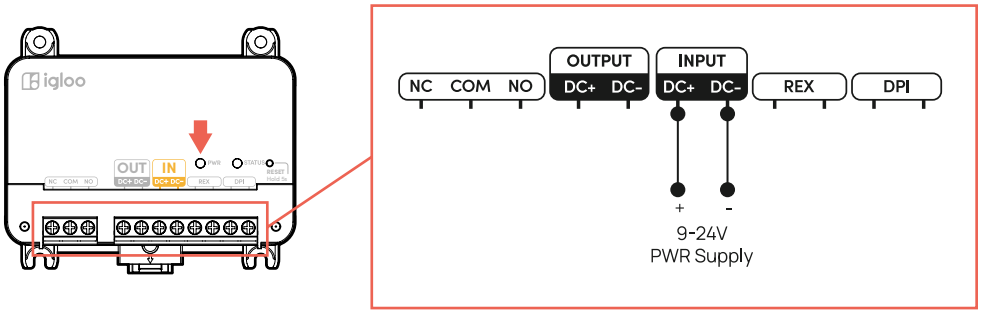

Provide Polarized (+/-) input ONLY to the INPUT pins.
DO NOT SUPPLY POWER TO THE OUTPUT AS IT MAY DAMAGE INTERNAL CIRCUITS.

The switch will not turn on if:

- The INPUT is connected in reverse, the switch is protected in this scenario.
- User connects power incorrectly to the OUTPUT in the correct polarity, the switch is protected.
- User connects power incorrectly to the OUTPUT in the REVERSE polarity, the switch may be damaged.

Fail Safe/Fail Secure Configurations

1. Fail Secure electronic locks are **locked** when power is cut. It uses the NO (Normally Open) configuration

2. Fail Safe electronic locks are **unlocked** when power is cut. It uses the NC (Normally Closed) configuration

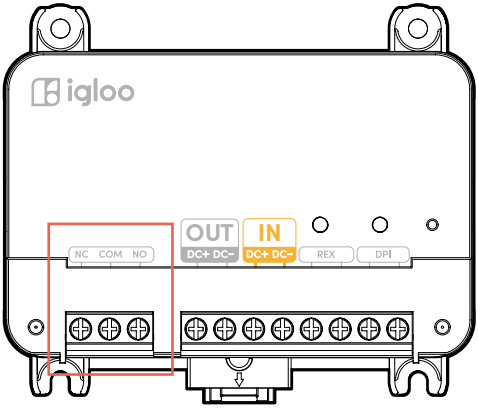

Connecting a Door Position Indicator (DPI) Device

1. Connect DPI (door position sensor) dry contact inputs into the DPI terminals.The orientation does not matter.

2. DPI switches may come in Normally Open, or Normally closed configurations. After pairing, you will be able to set the desired configuration in the iglooworks app.

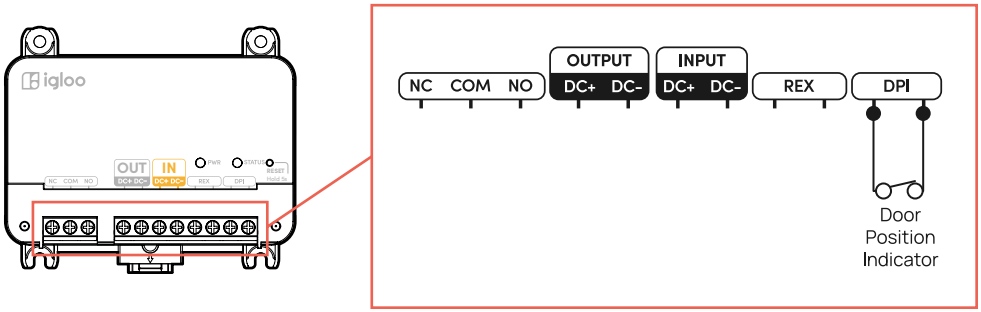

Note: In the default setting the DPI is set to off. After pairing it can be configured.

It is important to select the correct Normally Open or Normally Closed configuration of the DPI in order for it to behave correctly.

Connecting a Request-to-Exit (REX) Device

1. Connect a REX button to the REX dry contact terminals. The REX button should be a Normally Open switch. This means pressing the button will close the circuit.

2. Press and release the button, the STATUS LED should turn on for 3s. This is the default setting and indicates that the lock is unlocked.

3. Auto-relocking can be configured via lock settings in the app.

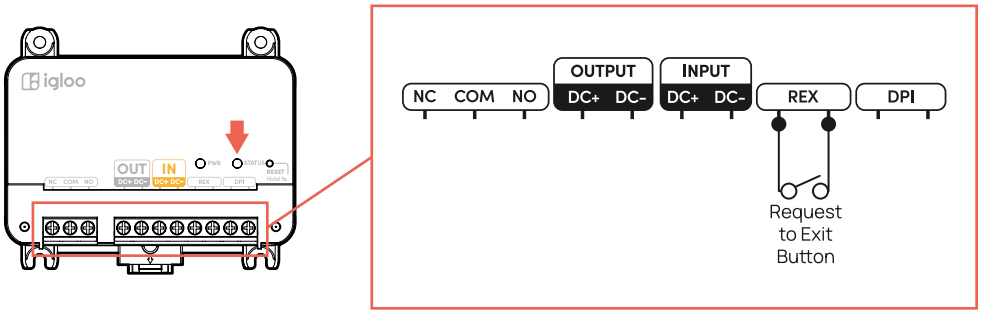

Connecting an Emergency Exit Button

An emergency exit button or REX can be installed as a direct interrupt between the electric lock and the power supply.

Below are two methods for isolated and non-isolated wiring configurations.

1. Isolated Wiring Configuration

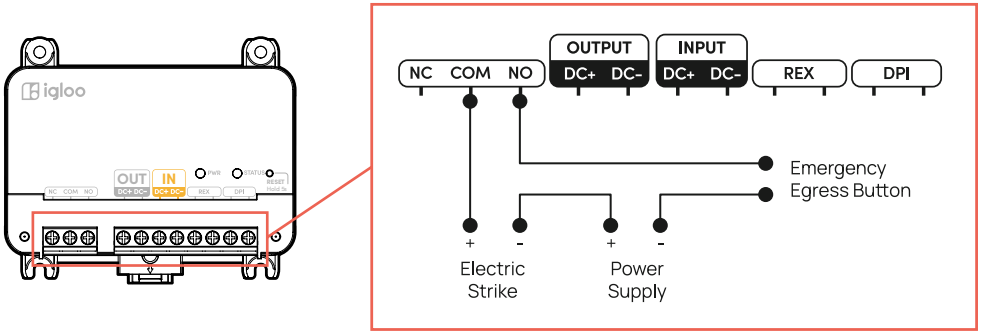

2. Non-isolated Wiring Configuration

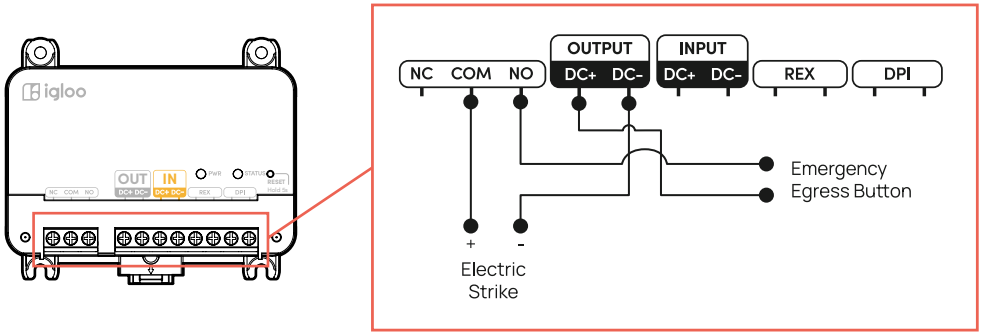

LED Status Indicators

There are two LED status indicators on the Switch

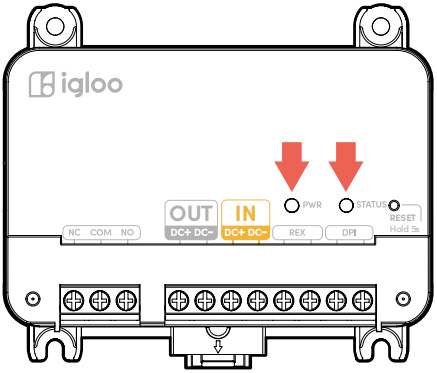

LED	Unlit	Green (Solid)	Blue (blinking)	Red (blinking)	Red (slow blink)
PWR	No power	The unit is powered	NA	NA	NA
STATUS	No power	NC or NO is activated	BLE communication	Factory reset	Overcurrent/ voltage/ temperature protection.

Hard Reset

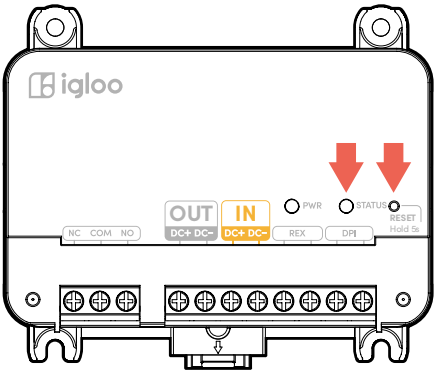

To hard reset the Switch,

1. Press, hold, and release the RESET button with a small pin for 5 seconds or until the status LED glows RED.
2. Once the hard reset is successful, the STATUS LED will blink RED

Note: Hard reset will erase existing settings and restore the Switch to factory settings. In order to pair the device again you must contact customer support.

Creating an Account

You will require an iglooworks account to pair and configure the switch. Please speak with your admin to set up this account. Upon successful invitation and registration you may proceed.

1. Download the iglooworks app on your smartphone via the App Store or Google Play Store.
2. Log in with your iglooworks account and organization ID.
3. Tap **[Enter].**

The iglooworks mobile app allows you to control the device within bluetooth range for setup, operation and maintenance.

App Store
go.iglooworks.co/ios

Google Play
go.iglooworks.co/android

Pairing the Switch

Before pairing, ensure that the Switch is powered on, and the PWR LED light is solid green. You may now begin to pair the Switch to your iglooworks account.

1. Select **[Locks]** from the menu.
2. Tap **[Pair New Lock]**.
3. Select the property.
4. Tap **[Next]**.
5. Select the lock model and follow the steps shown on the screen.

Unlocking via Bluetooth

If you are an owner or admin, you will be able unlock the lock via Bluetooth. This is also possible for an authorized manager or lock users once permissions are granted via the Dashboard.

1. Select **[Switch Name]** from the list of locks
2. Tap **[Sync & Unlock]**.

Note: Ensure your Bluetooth service is turned on and that you are within range of the Switch.

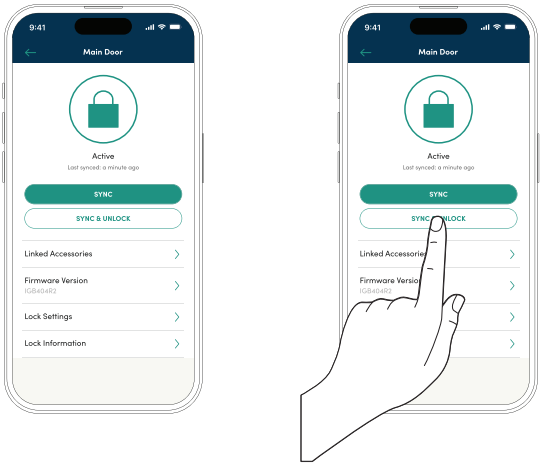

Manage Lock Features

Set Auto Relock and Relock Time	If you are an owner or admin, you will be able to turn Auto Relock ON/OFF. When turned ON, the Switch will automatically relock the electronic lock after a specified time. 1. Select **[Switch Name]** from the list of locks. 2. Tap **[Lock Settings]**. 3. Tap **[Auto Relock]**. 4. Toggle Auto Relock **[ON/OFF]**. 5. When Auto Relock is ON, use the slider to set the relock time. 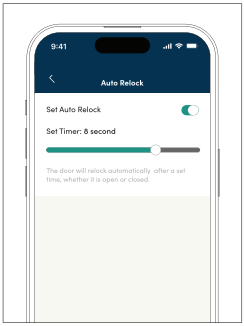
Set Door Position Indicator (DPI)	If you are an owner or admin, you will be able to turn DPI ON/OFF. When turned ON, the Switch will automatically relock the electronic lock after the DPI detects that the door is closed. **Note:** A DPI needs to be connected to the Switch for this feature to work. 1. Select **[Switch Name]** from the list of locks. 2. Tap **[Lock Settings]**. 3. Tap **[Set DPI]**. 4. Toggle Set DPI **[ON/OFF]**. 5. When Set DPI is ON, select Normally Open (NO) or Normally Closed (NC) based on the configuration of the DPI 

Set DPI Auto Relock and Relock Time	If you are an owner or admin, you will be able to set the DPI Auto Relock ON/OFF. When turned ON, the Switch will automatically relock the electronic lock after a specified time, when the DPI detects that the door is closed. 1. Select **[Switch Name]** from the list of locks. 2. Tap **[Lock Settings]**. 3. Tap **[Set DPI Auto Relock]**. 4. Toggle DPI Auto Relock **[ON/OFF]**. 5. When DPI Auto Relock is ON, use the slider to set the DPI relock time 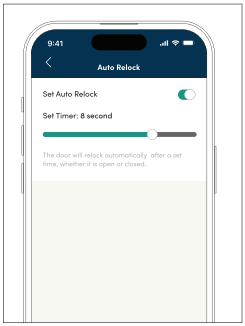
Passage Mode	If you are an owner or admin, you will be able to set the Passage Mode ON/OFF. Passage Mode allows for setting a schedule to keep the door unlocked when a valid credential is entered. The door will automatically relock when the passage mode ends. In the following example, the door remains unlocked from 7PM to 7AM, every Tuesday, Thursday, Saturday and Sunday. 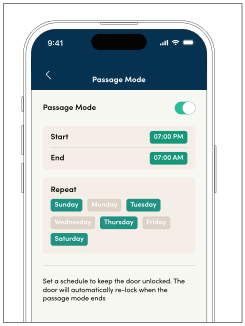
Check for Firmware Update	If you are an owner or admin, you will be able to check if there is a firmware update available for the Switch. **Note**: Ensure your Bluetooth service is turned on and that you are within range of the Switch. 1. Select **[Switch Name]** from the list of locks. 2. Tap **[Firmware Version]**. 3. If a new firmware version is available, you can download and update the Switch with the new firmware

Admin Features

If you're an owner or admin, speak with your igloo representative to get your account set up before you proceed. The Dashboard works best with Google Chrome, Safari and Mozilla Firefox.

Quick Start Guide
go.iglooworks.co/QSG



Owner & Admin Guide
go.iglooworks.co/UGOA



Compatible Devices

The Switch is compatible with the following igloo accessories. Use the EB1 Bridge to bring the switch online allowing remote unlock, syncing & editing or revoking credentials remotely. A stable WiFi connection is required. Use the IEF1 Keyfob for a non phone based bluetooth unlock. 8x key fobs can be linked to a single bridge.

Use the EK1 Keypad for app less access via PIN codes. The EK1 Keypad does not require any internet connection or wifi to generate unique time bound pin codes. It can be linked to the EB1 Bridge if customized pincodes are required or remote syncing and pin edit/ deletion are desired.

Keypad
EK1



You only need your PIN code

Bridge
EB1



Take your lock online with the Bridge

Key Fob
IEF1



Unlock with just one click

Troubleshooting

Hardware Troubleshooting:

LED	STATE	CAUSE	ACTIONS
PWR	OFF	No Power	(1) INPUT wires should be 9-24V_{DC}. (2) Polarity of INPUT wires must match.
PWR	GREEN (SOLID)	Power ON	No action needed
STATUS	OFF	No Operation (1) BT OFF (2) Out of range	(1) Ensure BT is enabled for the app. (2) Move closer (~10 ft line of sight)
STATUS	BLUE (BLINK)	BT Tx/Rx in progress	Wait for device to complete communication.
STATUS	GREEN (SOLID)	NC/NO active, lock triggered	(1) Check wiring to the lock or control panel. (2) Voltage between NC/NO & COM should match INPUT.
STATUS	RED (SOLID)	Over Current / Voltage / Temp	(1) Check all wiring (2) Check that INPUT voltage wires are 9-24V_{DC}.
STATUS	RED (SLOW BLINK)	HW or FW Failure during boot.	(1) Check that INPUT voltage wires are 9-24V_{DC}. (2) Disconnect and reconnect INPUT wires (3) OUTPUT voltage should match INPUT.
STATUS	RED (FAST BLINK)	Device reset to factory state.	(1) Pair & configure device as needed using app. (2) Contact customer support.

There is no response by the Switch after sending commands from my mobile phone application.

- Ensure your Bluetooth service is turned on and that you are within range of
- the Switch (<10m)
- Check that the Status LED blinks blue when a command is sent from the mobile phone application
- If there is still no response, perform a hard reset on the Switch. Refer to the Hard Reset section of the user manual

The Power (PWR) LED does not light up after connecting the wires to the power supply.

- Ensure that the power supply provides voltage between 9-24V_{DC}.
- Ensure that the wires are properly secured with the correct polarity.

Troubleshooting

iglooworks Troubleshooting:

Why do I get logged out automatically?

All accounts are logged out automatically after 1 hour for security reasons.

Why are my activities not updated on the dashboard?

As the locks are offline, they need to be synced via app or bridge to be retrieved and sent to the dashboard.

Can a lock be in multiple properties?

Yes, but the new property needs to be in the same timezone as the current property.

Why can't I delete my property?

A property cannot be deleted if locks are assigned to it; they need to be reassociated to another property first.

I made a mistake while creating a team member/lock user, how can I edit it?

Edits are not supported for this release, but you can delete and invite the person again.

What is my organisation ID?

The organisation ID is provided to the owner when they sign up. All users invited to this account will need to use this organisation ID when signing in.

Can I create PIN codes on the switch device?

No, as the Switch does not have a number pad. Please create PIN codes on the keypad linked to the switch device.

(Lock User) I do not see the lock on my app.

Please check with the owner/admins/ managers that you have been granted permissions to the lock.

Can I have different departments in my organization?

The current release only supports common access pin creation on Switch in a flat organization, i.e. single department.

I continuously get a timeout error when trying to unlock using bluetooth.

Please turn off Bluetooth on your phone, then turn it on again. If the issue persists, try restarting the app. Also, please make sure you are near the lock.

Where can I create PIN codes?

Owners, admins and managers can create all types of pins on the dashboard. All users can create common access offline pins (with some restrictions) on the mobile application.

FCC Compliance

This device complies with part 15 of the FCC Rules. Operation is subject to the following two conditions:
(1) This device may not cause harmful interference.
(2) this device must accept any interference received, including interference that may cause undesired operation.

Any Changes or modifications not expressly approved by the party responsible for compliance could void the user's authority to operate the equipment.

Note: This equipment has been tested and found to comply with the limits for a Class B digital device, pursuant to part 15 of the FCC Rules. These limits are designed to provide reasonable protection against harmful interference in a residential installation. This equipment generates uses and can radiate radio frequency energy and, if not installed and used in accordance with the instructions, may cause harmful interference to radio communications. However, there is no guarantee that interference will not occur in a particular installation.

If this equipment does cause harmful interference to radio or television reception, which can be determined by turning the equipment off and on, the user is encouraged to try to correct the interference by one or more of the following measures:

- Reorient or relocate the receiving antenna.
- Increase the separation between the equipment and receiver.
- Connect the equipment into an outlet on a circuit different from that to which the receiver is connected.
- Consult the dealer or an experienced radio/TV technician for help.

FCC Radiation Exposure Statement

This equipment complies with FCC radiation exposure limits set forth for an uncontrolled environment. This equipment should be installed and operated with minimum distance 20cm between the radiator & your body.

Complies with IMDA Standards DA108141

IC Caution

This device complies with Industry Canada's licence-exempt RSSs.
Operation is subject to the following two conditions:
(1) This device may not cause interference.
(2) This device must accept any interference, including interference that may cause undesired operation of the device.

This equipment complies with IC radiation exposure limits set forth for an uncontrolled environment. This equipment should be installed and operated with minimum distance 20cm between the radiator & your body.

Cet appareil est conforme aux CNR exemptes de licence d'Industrie Canada .
Son fonctionnement est soumis aux deux conditions suivantes :
(1) Ce dispositif ne peut causer d'interférences ; et
(2) Ce dispositif doit accepter toute interférence , y compris les interférences qui peuvent causer un mauvais fonctionnement de l'appareil.

Ce matériel est complété par une exposition de rayonnements IC pour un environnement naturel. Ce matériel doit être installé et se faire avec une distance minimale de 20cm entre les radiateurs et les autresYour body shop.